Name: _____ Primary 5-a-day Bronze

3rd February

$32 \div 4$

3×12

3 pens cost 60p

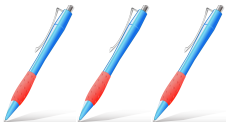

Find the cost of 1 pen

In the diagram, the three circles in each straight line **must add to the same number**

Write in the missing numbers

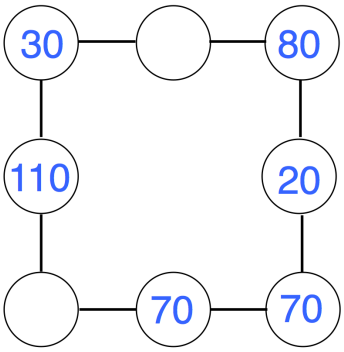

Rosie does her maths and science homework.

It takes her a total of **two hours**

She spends **90** minutes doing her maths homework.

How many **minutes** does she spend doing her science homework?

© Corbettmaths 2017