3rd January

$35\% \; of \; 340$

$\frac{1}{2} + \frac{1}{10} + \frac{1}{3}$

Draw the radius on this circle

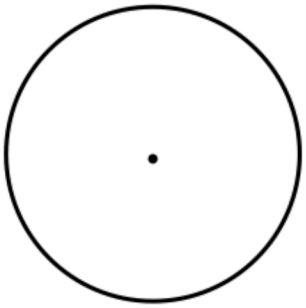

$22{,}176 \div 84 = 264$

Explain how the this fact can be used to answer 85×264

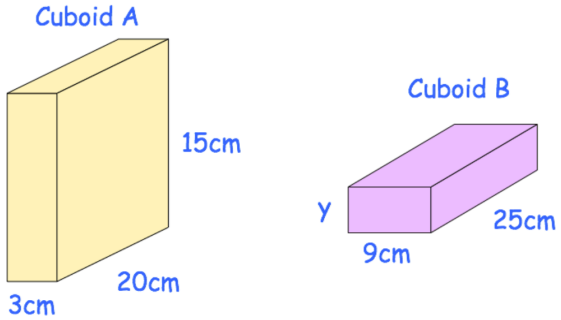

Cuboid A and cuboid B have the same volume.

Find the height of cuboid B, y

© Corbettmaths 2017