2nd July

$198{,}981 + 891{,}891$

86×759

w = 7 and **y** = 18

Work out $9\mathbf{w} - 2\mathbf{y}$

For every 5 50p coins, Laura has 4 20p coins.

Laura has £80.00 in 20p coins.

How much money does Laura have altogether?

Shown is the net of a cuboid.

Work out the volume of the cuboid.

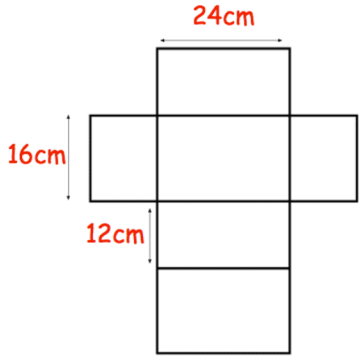

© Corbettmaths 2017